CHAPTER 6 THE CFC CHARGE GATEWAY – TRADING FINANCE PROFITS

Overview

1. Chapter 6 considers whether a CFC with 'trading finance profits' (a financial trading CFC) is overcapitalised. To the extent that any overcapitalisation is the result of capital contributions from connected UK companies, trading finance profits of the CFC arising as a result of the overcapitalisation will pass through the CFC charge gateway at Chapter 6 (Chapter 6 profits).

2. Trading finance profits of a CFC fall within Chapter 6 if two factors are present. These are, firstly that the CFC holds free capital or (in the case of a company carrying on insurance business) free assets greater than that it would be expected to hold if it were not controlled by any other company; and secondly that the CFC has UK connected capital contributions.

3. Trading finance profits is defined at section 371VG(4) [xref]. It includes amounts that would be calculated as loan relationship profits under Parts 5 to 7 of CTA 2009 and would be taxed under those Parts if they did not arise from trading operations (and so are taxed under Part 3 of CTA 2009).

4. The assessment of whether a CFC has Chapter 6 profits involves a three step process. The second of which applies only to those CFCs carrying on insurance business (insurance CFCs).

5. Step 1 determines whether the 'free capital' of a financial trading CFC exceeds the amount that would be held were the same activities carried on by a company not controlled by any other company (step 1 amount).

6. For insurance CFCs, step 2 must also be taken. This step determines the extent to which the CFC's 'free assets' exceed the amount that would be held were the same activities carried on by a company not controlled by any other company (step 2 amount).

7. If step 1 or step 2 determines that the CFC's free capital and/or free assets are excessive, and there have also been 'UK connected capital contributions', step 3 identifies the trading finance profits to which Chapter 6 applies. It does this by reference to the amount of profits that it is reasonable to suppose are attributable to the investment, or other use, of the step 1 or step 2 amounts. Thus, giving the Chapter 6 profits.

8. UK connected capital contributions are defined at section 371VA [xref] and are any capital contributions made to the CFC, whether that be directly or indirectly, by a UK resident company connected with it [xref]. Contributions will fall within this definition even when capital is contributed from the UK as part of a conduit arrangement. For example, capital contributions will still be within scope even where a CFC is financed from capital sourced from an overseas group company, but the arrangement requires a UK group company to receive a dividend prior to that company immediately contributing that capital from the UK (directly or indirectly) to the CFC.

9. The extent to which UK capital contributions are present will be determined by the specific facts of each case, but it should be noted there is no limitation on how far back the identification process can look. If it is not readily clear whether UK connected capital contributions are present, or if identifying them will be resource intensive, it may be more appropriate to firstly determine whether excess free capital or excess free assets arise before undertaking this work i.e. if no excess free capital or excess free assets are present, no Chapter 6 charge can arise so there is no need to consider the presence of UK capital contributions.

10. It follows that where a financial trading CFC has excess free capital and/or excess free assets but does not have any UK connected capital contributions, then there are no Chapter 6 profits.

11. Although no trading finance profits may pass through the CFC gateway at Chapter 6, financial trading CFCs will still need to consider whether the other gateway chapters apply to its finance profits. For example, it is possible that an insurance CFC could hold capital and assets in support of an activity separate from its main insurance business. Any profits arising from this separate activity will not fall to be considered under Chapter 6 – for example, non-trading finance profits would be considered under Chapter 5. In cases of uncertainty, please liaise with your International Issues Manager and/or CTISA contact as appropriate.

Terms used in Chapter 6

Free capital

12. 'Free capital' (section 371FA(2)) is the funding the company has for its business that does not give rise to loan relationship debits brought into account by either Part 3 or Part 5 of CTA 2009. In broad terms this means free capital is share capital (including share premium) and retained profits, however it will also include funding such as interest free debt (to the extent no loan relationship debits arise on that debt).

Free assets

13. 'Free assets' (section 371FA(3)) are the amounts by which the value of an insurance CFC's assets exceed its loan capital (i.e. money debts). The assets referred to are the gross assets of the CFC and are valued at a market rate i.e. the amount it is reasonable to suppose the CFC would obtain from a third party for the transfer of that asset (section 371FA(7)).

Not the 51% subsidiary of any other company

14. Both the free capital and free asset tests require a comparison to be made with a hypothetical case where the CFC is not controlled by any other company. This hypothesis does not require the CFC's wider group, or its own subsidiaries, to be disregarded; rather the comparison to be made is between the capital or assets the CFC holds with that which would be held by a company (which carries on the same business) that is not a 51% subsidiary (section 1154 CTA 2010) of any

other company. The test seeks to determine the extent to which the CFC retains free capital and/or free assets because it is controlled by another company or companies, rather than for commercial (non-tax) reasons.

15. The above hypothesis may identify a number of comparable companies, which provide a range of free capital and free asset levels. Whether and where the CFC falls within such a range will depend on the facts of each case.

1. The Basic Rule

16. The basic rule is applied to the CFC's accounting period via a three step process.

17. Steps 1 and 2 (in conjunction with sections 371FB and 371FC) consider the level of capitalisation of the CFC (x ref) and step 3 calculates the trading finance profits, if any, passing through the CFC charge gateway at Chapter 6. Overall, the process determines the extent to which the CFCs assumed total profits for the accounting period arise from overcapitalisation and then, to the extent that the overcapitalisation arises from UK connected capital contributions, quantifies the amount of Chapter 6 profits.

18. Parts 4 and 5 to this guidance set out some of the commercial drivers behind the capitalisation of banks and insurance companies. These factors will be helpful in firstly understanding the capitalisation position of the CFC being examined and secondly assessing the extent to which its capitalisation position is comparable to that of a company not controlled by any other company. Thus enabling consideration of whether it is "reasonable to suppose" the relevant CFC has excess free capital or assets.

19. The basic rule is applied as part of the self assessment process. It includes no safe harbours, so determining the Chapter 6 profits will depend on the facts and circumstances of each individual case.

Step 1

20. This considers whether, during its accounting period, a CFC's 'free capital' is greater than what it is reasonable to suppose it would be were the CFC not a 51% subsidiary of any other company carrying on the same business. Where it can be shown the 'free capital' is above that hypothetical comparable, then the CFC has "excess free capital".

21. 'The Step 1 amount' is the lesser of the excess free capital amount and the free capital derived (directly or indirectly) from UK connected capital contributions. In quantifying UK connected capital contributions the total free capital of the CFC (and not just the excess free capital) is considered.

Example

22. UK resident company A subscribes for share capital of £60m in its non-UK resident intermediate holding company B. Company B in turn subscribes for share capital of £100m in CFC C which carries on banking business (£40m

being sourced from Co. B's own reserves, the retained profits of which have no previous UK connection). CFC C's total free capital is now £100m.

23. On review, the facts of the case show that if CFC C was not a 51% subsidiary of any other company it would have free capital of £20m. CFC C therefore has excess free capital (Step 1(a) of section 371FA(1) amount) of £80m. However, as only £60m is provided from the UK Step 1(b) reduces the excess free capital ('the Step 1 amount') to £60m.

Step 2 (insurance CFCs)

24. Step 1 will have limited application to most insurers as they typically hold little equity finance. Step 2 applies specifically to insurance CFCs (of both insurance and non-insurance groups).

25. Insurance business is defined at section 371VA and means the business of effecting or carrying out of 'contracts of insurance', including the investment of premiums received [xref].

26. Insurance companies are financed by a mixture of equity, subordinated debt and premiums. Profits from these premiums are invested and retained as free assets, of varying forms, against the risk of insurance claims and losses i.e. the free assets are held to support the company's insurance risk exposure. Broadly the risks will include, but not be limited to:

- underwriting risks – those arising from the underwriting activities of the insurer;
- operational risks – those arising from its internal operations i.e. processing errors.
- strategic risks – those arising from its management errors
- credit risks– those arising from a default by an insurance counterparty
- market risks – those arising from fluctuations in its investments.

27. In contrast to step 1, step 2 therefore focuses on the free assets of an insurance CFC and the extent to which they are excessive.

28. However, in common with step 1, if the step 2 excess free assets amount exceeds the free assets derived directly or indirectly from UK connected capital contributions, then 'the step 2 amount' is limited to those UK connected capital contributions (section 371FA(1) step 2 (b)).

Exclusion of Guarantees from free assets

29. An insurance CFC may use its own free assets to provide guarantees against the insurance liabilities of other connected insurance companies. Section 371FA(5) and section 371FA(6) provide an exclusion of these amounts where those

guarantees require an insurance CFC to hold free assets in excess of the assets that it would otherwise hold.

30. The exclusion deducts the value of these assets from the free assets considered within step 2. To qualify the assets must:

- arise from the CFC, acting outside its own insurance business, giving a guarantee against the insurance losses of a connected company's insurance business;
- the guarantee provided is necessary for the purpose of that connected company meeting its own insurance business's regulatory requirements;
- as a result of giving the guarantee the CFC is required to hold more assets, than it would otherwise be required to hold to meet the regulatory requirements for its own insurance business; and
- during the accounting period the CFC holds those assets solely for the purpose of meeting that additional requirement i.e. holding them does not have an additional purpose.

Example

31. CFC A carries on insurance business (no step 1 amount arises) and has free assets of £900m. £200m of these are held to support guarantees it has provided to connected insurance company B. CFC A also has UK connected capital contributions of £150m.

32. On review, the facts of the case show that if CFC A was not a 51% subsidiary of any other company it would hold free assets of £550m. The same review also shows that only £150m of the £200m guarantees is necessary to support the regulatory requirements of B's insurance business.

33. The CFC A's excess free assets are £200m (being £900m – £150m – £550m). However, as the UK connected capital contributions are lower than £200m the step 2 amount is reduced to £150m.

When and over what time period should excess free capital or free assets be measured for the purposes of Step 1 and Step 2?

34. Step 1 and Step 2 apply to assess the extent to which a CFC is overcapitalised at any time within its accounting period. As they apply at any time an assessment of excess free capital or free assets can be done at any period of time, however short, within that accounting period.

35. However, in applying either step the capitalisation levels of the company throughout the accounting period must be factored in to put the periods of high levels of capital within a wider context. Care must be taken to ensure that each step is not applied in a manner which means peaks and spikes in capital levels that arise as a normal part of the CFC's financial trading are automatically considered as indicative of overcapitalisation.

36. The capital levels of a financial trading CFC will fluctuate during an accounting period. The steps should therefore be applied in a manner which distinguishes between peaks in capitalisation levels that:

- arise as a normal part of the CFC's business,
- are outside of the control of the CFC (or its connected parties),
- are short-term in duration or isolated in nature,

from those that are indicative of overcapitalisation.

Step 3

37. Where no excess amounts arise within either step 1 or step 2, then no Chapter 6 profits arise.

38. Where step 1 and/or step 2 amount(s) do arise, then the profits falling within Chapter 6 are the trading finance profits of the CFC so far as it is reasonable to suppose those profits arise from the investment or other use of either of the identified step 1 and/or step 2 amounts. It is important to note that step 3 is not seeking to merely apportion a share of the CFC's trading finance profits. It is instead seeking to identify the profits (which fall within the definition of trading finance profits), that are shown to be attributable to the excess.

Example

39. A CFC carrying on banking activity has excess free capital of £250m, but UK connected capital contributions of £150m. The step 1 amount is therefore limited to £150m. There is no step 2 amount.

40. In addition to a capital contribution from its UK parent of £150m equity, the CFC also borrows £150m from a connected UK company, at an interest rate of 5%.

41. The trading finance profits of the CFC are £30m.

42. Step 3 states that the Chapter 6 profits of the CFC are so much of its trading finance profits as it is reasonable to assume arise from the investment or other use of the step 1 and/or step 2 amounts.

43. In this case, a comparable is that the £150m loan from a UK connected company gives rise to income of £7.5m per annum (the income level comparison is the equivalent of profit, as a feature of free capital is that it should have negligible or no costs attached to it). It is reasonable to assume that the £150m equity – the step 1 amount – would give rise to a similar level of income. The step 3 amount, and therefore the Chapter 6 profit, is £7.5m.

44. Where a CFC is over-capitalised and the extent of the over-capitalisation varies throughout the accounting period, the step 3 amount should reflect the investment profits arising from the excess amounts determined at step 1 or step 2 as it varies from time to time throughout the period. For example, if there is a

£100m excess for 8 months and no excess for 4 months, the step 3 amount is the investment return attributable to £100m for that 8 month period.

45. This provides protection against any manipulation of capitalisation levels which could arise had step 1 or step 2 provided a specific application date or dates.

2. Interaction with Chapter 9

46. Chapter 6 contains specific provisions at sections 371FB and 371FC, which deal with the interaction of Chapter 9 with Chapter 6. Chapter 9 contains the conditions in relation to the full and partial exemption from a Chapter 5 charge on a CFC's non-trading finance profits. These exemptions are available to the extent that the CFC's non-trading finance profits arise from a 'qualifying loan relationship' (defined at section 371IG - x ref).

47. Chapter 6 contains rules which ensure that if a CFC that falls within Chapter 6 (i.e. a CFC whose assumed total profits include trading finance profits) is the ultimate debtor in relation to a qualifying loan relationship, the excess free capital or excess free assets of that CFC are adjusted to take account of the qualifying loan relationship for which full or partial exemption has been applied under Chapter 9. The purpose of this is to provide that, to the extent that the profits of the qualifying loan relationship are exempt, the loan capital is treated as free capital or free assets in the hands of the ultimate debtor CFC.

CFC - Qualifying loan relationship adjustment

48. Section 371FB applies where a CFC within Chapter 6 (a CFC with trading finance profits) is the ultimate debtor (debtor CFC) in relation to a qualifying loan relationship of another CFC (creditor CFC). 'Ultimate debtor' and 'qualifying loan relationship' are defined and explained within the Chapter 9 guidance (x ref).

49. Whilst Chapter 9 may exempt some or all of the non-trading finance profits which arise to the creditor CFC from a qualifying loan relationship, the Chapter 6 adjustment is calculated in terms of the loan capital outstanding (the "principal outstanding").

50. Section 371FB(2) and section 371FB(3) provide the calculation to determine the percentage of the 'qualifying loan relationship' profit which is exempt under Chapter 9. This percentage (E%), is then applied to the principal outstanding. The resulting amount is added to the free capital or free assets of the debtor CFC. E% is calculated by using the following formula:

$$E\% = (100\% \times EP)/P$$

'EP' is the total amount of profits of the qualifying loan relationship which is exempt.
'P' is the total amount of the profits of the qualifying loan relationship.

51. Section 371FB(4) and section 371FB(5) provide that for the purposes of calculating E%:

- where the accounting periods of the creditor and debtor CFC do not match, the profits and consequently the loan capital are apportioned pro rata;
- profits of a qualifying loan relationship for the creditor CFC's accounting periods falling wholly or partly in the accounting periods of the debtor CFC are to be considered;
- the profits of the qualifying loan relationship for an accounting period of the creditor CFC are to be determined in accordance with Chapter 9;
- the section 371FB(5) calculation has to be undertaken for each chargeable company which makes a Chapter 9 claim and the ultimate debtor is within Chapter 6.

52. Section 371FB(5) uses a two step approach to determine the amount of exempt profits under Chapter 9, and then apportion those exempt profits to each chargeable company in accordance with the allocation rules in Chapter 2.

53. The application of the percentage P% (determined by section 371BC(3)) ensures that the exempt qualifying loan relationship adjustment for Chapter 6 matches the percentage of profits allocated to each chargeable company. The Chapter 2 adjustments for shares held as trading assets and companies carrying on BLAGAB are disregarded for the purposes of section 371FB.

54. The effect of section 371FB(5) is to ensure that where there are several chargeable companies, or if the chargeable company has less than 100% of the profits of the CFC apportioned to it, the amount of exempt profits of the qualifying loan relationship to be considered under Chapter 6 is reduced accordingly.

Example

55. Consider the diagram below. As UK Co has a relevant interest in the Ch 9 CFC, it would only be subject to a potential CFC charge on £70m (70% of the £100m QLR (qualifying loan relationship)). Assuming the QLR is subject to partial exemption, then 75% of the profits arising on that £70m QLR will be exempt (those arising on £52.5m of the loan). The £52.5m will be added to the free capital or free assets (where appropriate) when assessing the capitalisation position of the Chapter 6 CFC.

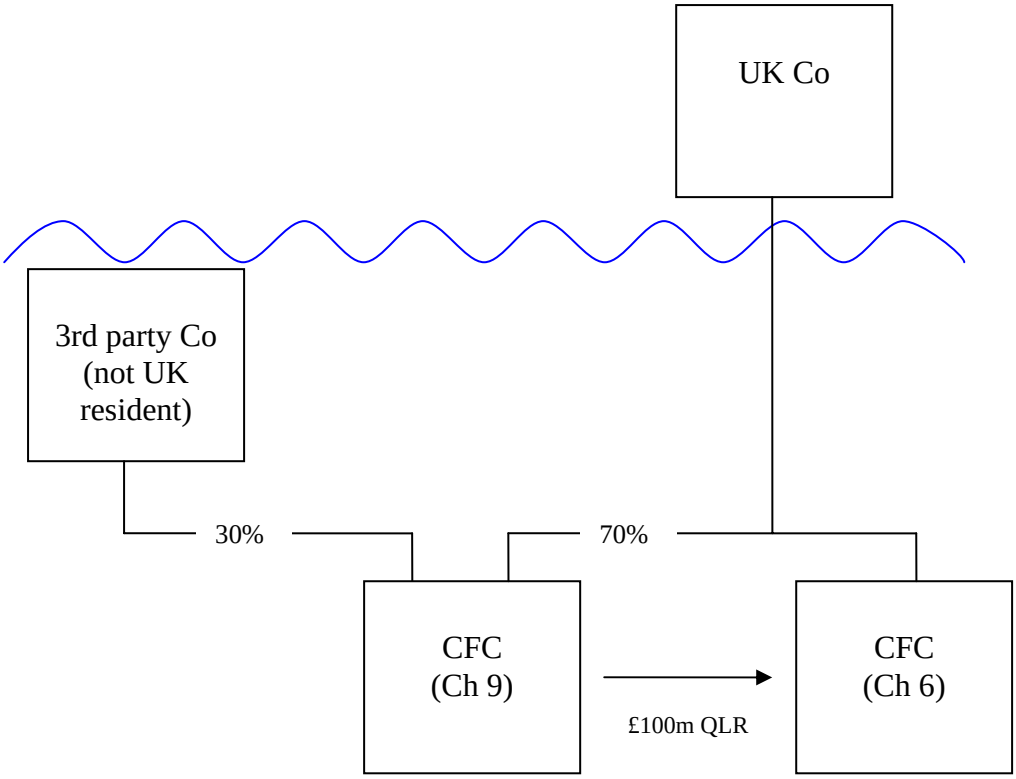

Example: application of section 371FB

56. CFC A has trading finance profits so falls within Chapter 6. CFC A receives a loan of £200m from a connected CFC B (a group finance company). CFC B makes a qualifying loan relationship profit of £10m in the accounting period from this loan. There is no repayment of the loan during the accounting period.

57. Both CFCs have a 31 December accounting date and are 100% subsidiaries of a UK parent company.

58. The UK parent makes a successful claim for partial exemption under Chapter 9 for the £200m CFC B loan (CFC A is the ultimate debtor). 75% of the profits of the qualifying loan relationship are now exempt.

59. Sections 371FB(2) and 371FB (3) apply as follows in calculating E%:

    EP = exempt profits of qualifying loan relationship = £7.5m

    P = total profits of qualifying loan relationship = £10m

    E% = 75% (100% x 7.5/10)

60. This results in £150m (being 75% of the principal outstanding during the accounting period - 75% of £200m) being added to the free capital or free assets of CFC A for the purposes of determining the step 1 or step 2 amounts.

Example: non-matching accounting periods

61. Facts as above, except that CFC A has an accounting date of 31 December and CFC B has an accounting date of 31 March.

62. Section 371FB(4) applies here to ensure the profits are apportioned correctly, where the accounting period of the creditor CFC (CFC B) only falls partly within the accounting period of the debtor CFC (CFC A).

- CFC A's accounting period runs from 1 January 2014 to 31 December 2014.
- CFC B's accounting period runs from 1 April 2014 to 31 March 2015.
- The loan is made on 1 April 2014.

63. Profits on the qualifying loan relationship for CFC B, for accounting period ended 31 March 2015, are £10m. As 9/12 of the accounting period of CFC B falls within the accounting period of CFC A, 9/12 of the profit of £10m are included in the section 371FB(3) calculation of E%.

- 9/12 of £10m = £7.5m, of which £5.625m would be exempt
- Section 371FB(3) calculation E% = 75% (100 x 5.625/7.5)

64. Although this is the same percentage as in example 1 above, section 371FB(2) refers to E% of the principal outstanding during the accounting period. In this case 75% of £200m = £150m is added to CFC A's free capital or free assets for the period from 1 April 2014 to 31 December 2014.

Permanent Establishments – Qualifying Loan Relationship adjustment

65. Section 371 FC applies where a CFC is the ultimate debtor of a qualifying loan relationship which comprises a loan from an exempt permanent establishment (following an election under section 18A of CTA 2009) of a UK resident company. Its application mirrors the treatment of section 371FB, so as to ensure there is parity whether a qualifying loan relationship is made from either a CFC or an exempt permanent establishment.

66. So, where non-trading finance profits arising on a qualifying loan relationship are included in the relevant profits amount or relevant losses amount for an exempt permanent establishment for the purposes of section 18A CTA of 2009, the amount of corresponding qualifying loan relationship will be added to the free capital (or free assets as appropriate) for Chapter 6 purposes, in a similar way as loans that are treated as qualifying loan relationships from CFCs are added.

67. There is no section 371FC equivalent to the formula in 371FB for loans from foreign PEs, because they are not able to access full exemption for their qualifying loan relationship profits. [xref to Part 2 Foreign PE guidance]

Example

68. UK company C makes a section 18A CTA 2009 election, which covers its branch operating in Switzerland.

69. The Swiss branch makes a loan to CFC D carrying on banking business.

70. Company C makes a Chapter 9 claim, as applied via section 18HE CTA 2009, in respect of the loan made by its Swiss branch. The loan is a qualifying loan relationship so 75% of the profits within the branch are now exempt from UK corporation tax (25% of the loan relationship profits remain within the charge to UK corporation tax).

71. Section 371FC ensures that 75% of the principal outstanding is added to the free capital of CFC D. This ensures that the level of exemption applied to the profits of the loan under S18A CTA 2009 matches the proportion of the loan added to the free capital of CFC D.

3. Banking "safe harbour" Regulations - SI 3041/2012

72. These regulations contain detailed conditions which enable banking CFCs to apply a mechanical capitalisation test. If a CFC meets the conditions set out in the Regulations, no Chapter 6 charge will arise in respect of the profits arising from the banking business of the CFC.

73. Section 371FD confers the necessary powers for these regulations.

74. The purpose of these regulations is to provide an alternative to the main Chapter 6 conditions for a CFC carrying on banking business. That alternative is a mechanical calculation which compares the tier one capital ratio of the CFC with the tier one capital ratio of the group as a whole.

75. Such a comparison may well form part of the process of assessing whether a banking CFC has excess free capital. However, these regulations are intended to offer an alternative, mechanical "safe harbour". Unlike the capital interest test in the previous CFC regime, this banking safe harbour is based on UK regulatory capital ratio requirements. The aim here was to provide a safe harbour which was relatively simple to apply, and aligned with existing regulatory requirements.

76. The Regulations themselves are relatively short and straightforward. They are structured as follows.

77. Regulation 1 : citation, commencement and effect. This simply states that the regulations come into force on 1 January 2013, and have effect for accounting periods beginning on or after 1 January 2013.

78. Regulation 2 : Interpretation. This defines the terms used in the Regulations. These are covered in more detail below.

79. Regulation 3 : Disapplication of the primary legislation. Provided that the conditions within Regulation 4 are met, step 3 of Section 371FA(1) will not

apply to the trading finance profits which arise from the banking business of the CFC.

80. Regulation 4 : Sets out the capital requirements test, the details of which are set out below.

81. Regulation 5 : Supplementary provisions which provide the necessary definitions and formulae to apply the capital requirements test in Regulation 4.

Definitions used in Regulations

82. The Regulations are based on the requirements of the FSA Handbook, and in particular on the requirements set out in BIPRU 11 and GENPRU 2 Annex 2 of the FSA Handbook.

83. These FSA rules set out requirements for banking groups to make regulatory returns which set out the consolidated capital position of the group. In particular, these regulatory returns set out details of the risk weighted assets and the total tier one capital of the group.

84. Regulation 2 simply uses the terms employed by the FSA Handbook as the basis for terms used in the safe harbour regulations. In particular, the regulations are based on the requirement that there is a group for which a return of consolidated information is required under BIPRU 11 – for the purposes of the regulations, this group is called a "UK Banking Group".

Regulatory Capital Requirements Test

85. The actual capital "safe harbour" test is set out in regulation 4. It comprises three conditions. All three conditions need to be met in order for the Chapter 6 charging mechanism to be turned off by Regulation 3.

- Regulation 4(1) The first condition is that the CFC must be a member of a UK banking group throughout its accounting period.

- Regulation 4(2) The second condition is that the tier one capital ratio of the CFC at the end of its accounting period does not exceed the capital ratio limit of the group.

- Regulation 4(3) The third condition is that it must be reasonable to suppose that the average tier one capital ratio of the CFC throughout the accounting period does not exceed the capital ratio limit.

86. This third condition is an anti-avoidance measure, which is designed to prevent manipulation of capital levels. For example, in the absence of this condition, it would be possible for a group to hold a large amount of capital within a CFC for 11 months, and then to move that capital out of the CFC before the end of the accounting period. Whilst the level of capital at the end of the period may well be within the capital ratio limit, it is likely that for much of the accounting period the CFC had an excess of free capital.

87. The third condition would not be met in such circumstances, because the average tier one capital ratio throughout the accounting period would exceed the capital ratio limit.

Regulation 5 : Capital Ratio Definitions

88. Regulation 5 provides the necessary definitions for the three conditions of the capital requirements test.

89. The **capital ratio limit** is defined as 125% of the group tier 1 capital ratio for the last regulatory return period which ends before the beginning of the CFC's accounting period (the relevant accounting period).

90. So, for example, if the CFC's accounting period is the period 1 January 2015-31 December 2016, then the last regulatory return period which ends before 1 January 2015 would be the period ended 31 December 2014.

91. The safe harbour regulations allow groups to monitor the level of capital in the CFC during the accounting period by reference to a fixed limit which is determined by the group position at the end of the previous period.

92. The **group tier one capital ratio** is calculated as 100% x A/B, where:

- A is the total tier one capital of the group for the regulatory return period as shown either in the FSA regulatory return or, if different, in the group consolidated accounts, so long as they have been calculated on the same UK regulatory basis. This option is included to account for the possibility that the finalised figures in the group accounts may have been updated from the initial regulatory return – for example by including the profits of the final quarter.

- B is the total risk weighted assets of the group for the regulatory return period or, again, if different the amount shown in the group consolidated accounts (calculated on the same UK regulatory basis).

93. The capital requirements test makes a comparison between the capital ratio limit (set by reference to the group tier one capital ratio) and the tier one capital ratio of the CFC.

94. The **tier one capital ratio of the CFC** is calculated using the formula 100% x C/D, where:

- C is the net total tier one capital of the CFC at the time and

- D is the aggregate of the risk weighted exposure amounts of the CFC at that time.

95. This formula is to be applied on the assumption that BIPRU 11 applies to the CFC, and that the CFC was required to make a regulatory return other than as part of a group return.

96. The reason for the different terms used in the two ratios is simply that whilst the consolidated regulatory returns of banking groups actually use the terms total risk weighted assets and total tier one capital, the FSA Handbook refers to risk weighted exposure amounts and net total tier one capital. As Regulation 5(3) only deems that a CFC makes a UK regulatory return, it is necessary to use precise terms within the FSA Handbook, rather than the terms in common usage in the actual regulatory returns made to the UK. In practical terms, there is not intended to be any difference between the way the tier one capital ratios of the group and the CFC are calculated.

97. The regulations are not intended to be applied in such a way that a group has to carry out entirely separate capital ratio calculation for the CFC. Whilst in strictness it may be the case that a different method of risk weighting might be appropriate for a stand alone entity such as a single CFC, this does not mean that groups will be required to use a different basis of calculation for the CFC.

98. The regulations are intended to allow a direct comparison between the level of capital in the CFC and the level of capital in the group as a whole. In order to allow such a comparison, the expectation is that the same basis of risk weighting would be used for both the group and the CFC.

99. Although the mechanics of the regulations require two separate calculations – one for the group and one for the CFC – another way of looking at the regulations is that they are asking whether the balance of capital and assets in the CFC is in proportion to the balance in the group as a whole.

100. An alternative approach would have been for the regulations to seek to identify the extent to which the CFC contributed tier one capital and risk weighted assets to the group regulatory return. However, this approach would have required various adjustments to take account of intra-group balances and transactions which would have been cancelled out on consolidation.

Example

101. The capital ratio limit set by reference to the UK group regulatory return for the last period before the start of the CFC's accounting period was 14%. This was calculated as 100% x total tier one capital of the group for the period/total risk weighted assets of the group for the regulatory return period.

- Total tier one capital 112.
- Total Risk Weighted Assets 1000.
- <u>Group Tier One Capital Ratio</u> 112/1000 = 11.2%
- <u>Capital Ratio Limit</u> is 125% of group tier one capital ratio : 11.2% x 125% = 14%

102. The CFC's tier one capital ratio at the end of its accounting period was 12%. This was calculated as 100% x net total tier one capital/total risk weighted exposure amounts

- CFC total tier 1 capital 12
- CFC total risk weighted exposure amounts 100
- CFC tier 1 capital ratio 12/100 = 12%

103. However, for the first 9 months of the accounting period of CFC, additional tier 1 capital of 20 had been provided to the CFC from its UK parent. The tier one capital of the CFC at the start of the accounting period was 12. The risk weighted exposure amounts of the CFC had remained relatively static throughout the accounting period.

104. Regulation 4(3) - Condition 3 - asks whether it is reasonable to suppose that the average tier one capital ratio of the CFC throughout the accounting period did not exceed the capital ratio limit.

105. On the basis that the risk weighted exposure amounts during the accounting period remained at 100, the tier one capital ratio of the CFC for the first 9 months of the accounting period would have been as follows:

- Total tier 1 capital 12 + 20 = 30
- Total risk weighted exposure amounts 100
- Average CFC Tier 1 capital ratio for first 9 months of accounting period = 30%

106. Although the average CFC Tier 1 capital ratio for the last quarter would have been 12%, the average CFC Tier 1 capital ratio for the accounting period exceeds the capital ratio limit of 14%. On a time-apportioned basis, the average CFC tier 1 capital ratio for the accounting period would have been 25.5%

107. It follows that in this example, Condition 3 in Regulation 4(3) is not met : it is not reasonable to suppose that the average tier one capital ratio of the CFC did not exceed the capital ratio limit.

4. Capital requirements in the banking sector

108. There are a number of regulatory requirements which govern the level of capital required for banks, building societies, and similar institutions. Within the UK these requirements are set by the Financial Services Authority (FSA) and are linked to:

- the international requirements which arise out of the Basel accords (Basel I, II and III) and

- the capital requirements set by the European Commission (the most recent of which is Capital Requirement Directive IV, published in July 2011).

109. Following on from the 2007 financial crisis, all regulators have moved towards a requirement for a greater amount of capital to be held by banks and similar financial institutions. So, for example, the European Commission CRD IV package, published on 20 July 2011, consists of a Capital Requirements Directive (CRD) and a Capital Requirements Regulation (CRR). These in turn reflect the Basel III capital proposals.

110. The stated aim of CRD IV is to increase both the quality and quantity of bank capital, including an emphasis on Tier 1, strengthening capital requirements for counterparty credit risk and introducing a leverage ratio, new capital conservation and countercyclical capital buffers. In addition, CRD IV includes proposals for a Single European rulebook, which is intended to replace the separate rules within each Member State with a harmonised approach across the UK.

111. The UK Government set up an Independent Commission on Banking (ICB) which reported in September 2011. The ICB recommendations, which have been adopted by the UK Government, included higher capital requirements, and mandatory minimum leverage ratios.

112. All of the regulatory requirements are based on minimum capital requirements, with associated buffers or margins above those minimums. In practice, banks ensure that they hold capital in excess of the minimum requirements set by the regulators. However, from a CFC perspective, the risk is in relation to banks holding too much capital or equity, rather than too little especially where the CFC is resident in a territory with a beneficial tax regime.

113. So although regulatory requirements may be a sensible starting point when reviewing a CFC's capital requirements, a test that only required a bank to meet the regulatory capital requirements of the territory in which it was resident would not have any real impact as this identifies the minimum capital required to be held and does not identify the reason behind capitalisation in excess of the regulatory limit. The issue instead is the extent to which the equity-like capital held by a bank exceeds any regulatory requirement, and, if there is any excess, identifying whether there is a commercial (non-tax) rationale for retaining that level of capital.

114. As set out above, the section 371FA step 1 calculation approaches this by asking whether the free capital of the CFC exceeds that which it is reasonable to suppose would be held by the CFC if it was not a 51% subsidiary of any other company). This is subject to a further limitation which is that if the total UK capital contributions are less than the excess free capital, then the step 1 amount is limited to the total UK connected capital contributions.

115. In ascertaining the CFC's free capital the facts and circumstances in each case may differ and consequently there will be a range of possible outcomes that reflect an appropriate commercial level of free capital, rather than a precise, fixed amount of free capital for each CFC.

116. In assessing whether the free capital of a bank exceeds that which would be held if the CFC was not a 51% subsidiary of any other company, there will be a number of factors which need to be taken into consideration. The following list is illustrative of the type of factors that can be taken into consideration with regard to this condition.

i) Local regulatory requirements.

117. Evidence that the local regulator has stipulated that the CFC hold a specified minimum level of capital (plus an appropriate buffer to ensure that that regulatory minimum is not breached) will in most cases be a suitable measure of a CFC's free capital especially where the CFC is resident in a high tax territory.

118. In some circumstances, it will be necessary to understand the regulator's approach to local capital requirements – for example, where a CFC's local regulatory capital requirements appear higher than would be expected in that territory. In such cases it will be necessary to review and understand the basis for the regulator's decision. This is likely to be the case where the local regulatory capital requirement for that CFC does not reflect similar local capital requirements for other companies (within the group or externally) in that territory.

119. Another example where further assurances may be needed is when the local regulatory requirements are significantly greater than would be the case if the CFC were subject to UK regulatory requirements.

ii) Group regulatory requirements.

120. To the extent that the lead regulator for a banking group sets regulatory requirements for the whole group, the expectation will be that those requirements will be reflected in the level of capital held by the CFC.

iii) Group capitalisation and distribution policy.

121. This will include evidence of consistency across the group covering both low and high tax jurisdictions. Evidence that the level of capital within a CFC in a low tax territory is similar to the level of capital in high tax territories will support the view that the CFC under consideration is not over-capitalised. This may require more detailed consideration than the simple application of a group capital average, as that average may be affected by certain holdings in certain jurisdictions. However, evidence that the group follows a consistent capitalisation policy which is independent of territorial tax considerations will support the view that a CFC is not over-capitalised. Similarly, a consistent group dividend policy would tend to support the view that a CFC is appropriately capitalised. Any exceptions to such a policy may warrant further consideration.

iv) Commercial Considerations.

122. Evidence of particular market-led or commercial considerations which required a particular level of capital being held by a CFC. These considerations may be linked to local regulatory requirements, but commercial judgement about market

conditions, or concerns about particular transactions with independent counter-parties can also be taken into consideration.

123. Unusual or exceptional commercial circumstances will typically be short term in nature and not part of the structural financing structure of the CFC. Groups will need to be able to demonstrate that the additional free capital was required to be held directly by the CFC, rather than it being a group capital requirement. These commercial factors will be need to be considered alongside other factors such as regulatory capital requirements in the CFC's territory of residence and that of the group, and whether obtaining a tax advantage was a consideration in fixing capital levels.

v) UK Tax Considerations.

124. Evidence to whether there is a link between the level of capital held and UK tax considerations. The most obvious case would be a CFC holding capital which is then used to fund loans back to UK connected parties. If such arrangements are in place, it will be harder for the CFC to demonstrate that there is a commercial reason for the level of capital held.

Annual Review Required

125. Although the CFC capitalisation position will need to be assessed on an annual basis, it is anticipated that groups will discuss the application of Chapter 6 with their CRM – with appropriate support from CTISA where necessary. Given the general terms adopted by the Chapter 6 legislation, it is expected that once the capitalisation of a CFC has been reviewed and agreed, the ongoing Chapter 6 position will be subject to a risk assessment approach for both sides.

Fluctuations in level of capital

126. The basic rule at section 371FA requires a determination of whether, at any time during the accounting period, the CFC has excess free capital (or, if less, free capital derived from UK connected capital contributions).

127. Applying this condition during the accounting period means that whilst it is not sufficient to test the position at the accounting date, nor is it necessary for the position to be tested on a daily basis. Although in strictness, any spike in the level of free capital could cause this condition to be triggered, the practical application of such an approach would be problematical.

128. Clearly, if it was determined that the CFC had excess free capital for, say, one week during an accounting period, then this would produce a "step 1 amount." However, the application of step 3, which asks how much of the trading finance profits it is reasonable to suppose arose from the investment or other use of that excess free capital, would have to consider not just the step 1 amount, but also the length of time for which that step 1 amount was available.

Subsidiaries of CFCs carrying on banking business

129. As a matter of practicality, it is expected that Chapter 6 will be applied to the direct banking subsidiaries of UK banking groups in the first instance.

130. If it is determined that CFC A, which is a direct subsidiary of a UK bank, does not have any excess free capital, and therefore no charge arises under Chapter 6, does it follow that no Chapter 6 charge will arise in respect of all subsidiaries of CFC A ?

131. Because the legislation applies to all CFCs on an individual entity basis, it is not possible to exempt a sub-group from consideration under Chapter 6 on the basis that no Chapter 6 charge arises for the holding company of the banking sub-group.

132. However, it is expected that a group's risk assessment, will cover the capitalisation position for a banking sub-group. If, as a matter of fact, the members of a sub-group have a similar business profile and a similar capitalisation profile, it will be reasonable for the relevant CFCs to be considered together.

133. Conversely, if the business activities and the capitalisation profile of different CFCs within a banking sub-group are markedly different, then those differences will require further consideration.

5. Factors relevant to the capitalisation of insurance companies

134. This part of the guidance looks at the factors that are relevant to capitalisation levels within the insurance industry. It aims to assist in determining the circumstances in which a CFC carrying on insurance business ('an insurance CFC') may be over-capitalised.

135. An insurance company holds excess capital or assets only to the extent that its free capital or its free assets exceed the amounts that it is reasonable to suppose would be held by a company carrying on the same business if no other company held (directly or indirectly) a majority of that company's shares, i.e. an 'uncontrolled company'.

136. The overcapitalisation tests are set out in steps 1 and 2 of section 371FA(1) (xref). The CFC's 'free capital' at step 1 is its equity funding. Its free assets at step 2 are its total assets less any debt. Most insurance companies will hold both free capital and amounts derived from insurance premiums, but typically no significant debt funding. As a result, both of these tests broadly encompass a test of the overall level of assets held by the CFC.

137. It is therefore necessary to consider a comparison of the assets an uncontrolled company would hold, determined by the needs of the particular business, with that of the CFC. Factors that influence the levels of capital and assets held by such a company include:

- the requirements of its insurance regulator

- the group's capital management policy, which will set the levels of capital, how long it should be held and when and what should be done with it,

- the expectations of credit rating agencies

- other commercial drivers, including market pressures on insurance companies requiring them to hold particular levels of capital or financial instruments (such as letters of credit).

138. It is important to establish, understand and consider the commercial purposes for which an insurance company holds capital before concluding it is over-capitalised. Some of these purposes are discussed in more detail below. In cases of uncertainty, please liaise with your International Issues Manager and/or CTIAA contact as appropriate.

Regulation

139. Insurance Regulatory regimes vary widely from territory to territory. Some rely on simple mathematical formulae while others are based on complex risk modelling. Some regulators may require levels of capital substantially in excess of the capital normally required to be held under normal commercial conditions. In reaching a decision point on the capitalisation levels you will need to factor in, amongst other things, the local regulator's requirements.

140. In doing this it is necessary to consider whether the CFC is holding more capital or assets than it is reasonable to suppose it would hold if carrying on insurance business and was not controlled by any other company. It is only possible to arrive at the conclusion that it is holding more capital or assets than is reasonable if it can be shown that the amounts held are not reasonably required for the purposes of its own insurance business i.e. they are held to support a separate trade or investment activity.

141. It is not possible to set out the requirements of all insurance regulatory regimes within this guidance. So, in order to provide an overview of the reasons and driving forces behind an insurer's capital levels, the guidance below outlines regulatory principles that are widely adopted in the UK and elsewhere. The terms and principles set out below may differ from regime to regime, so you will need to focus primarily on the local regulatory regime requirements but the following guidance will assist in understanding the wider principles.

142. The regulatory principles set out below will be present to some extent in the majority of regulatory regimes. However, it is possible some regimes will apply bespoke or flat capital requirements, or calculations that are less detailed than those in the UK. In light of this the limited presence, or total absence, of the following regulatory principles should not be taken as an automatic indicator of a heightened risk of over-capitalisation but may be such an indicator where a CFC is resident in a beneficial tax territory.

UK Insurance regulation

143. The UK's FSA applies both a simple mathematical formula - 'Minimum Capital Requirement' (MCR) - and a risk based model - 'Solvency Capital Requirement' (SCR). The MCR and SCR are levels of capital calculated and set in order to reduce the risk of insolvency for the insurer. They also act as regulatory floors to which the insurer must pay careful attention.

144. It is important to note that whichever factors an insurance CFC chooses to manage its capital levels by, it will hold an additional capital buffer. This buffer is to provide a safety net to cater for fluctuations in capital levels so as to minimise the risk of a ratings downgrade, a breach of regulatory requirements or to protect against market volatility. The extent (if at all) to which a buffer is considered as excess free capital or excess free assets will depend on the facts of each case.

a) MCR

145. This sets the lowest level of capital an insurer should keep to support its business. It is calculated by reference to a percentage of premiums or claims. Where the capital resources of the insurance company fall below the MCR, it is likely the FSA will remove authorisation for the company to underwrite insurance business.

146. To enable the insurer to hold sufficient capital resources for its business needs and also the regulators requirements, it will factor in the probability of things such as 'significant risk events', rating agency requirements and market volatility when considering the levels of capital resources to hold. You are therefore unlikely to see levels of capital resources being held at, or close to, the MCR level given the increased business risk and regulator intervention the insurance company would be exposed to.

b) SCR

147. This sets a higher level of capital than MCR. It reflects a level of capital that enables the insurance or reinsurance company to absorb potentially significant losses whilst still giving its policyholders reasonable assurance their liabilities or payments will be met. Insurers will normally hold capital above the SCR. This may be due to the need for a capital buffer (as detailed below) and/or to ensure the requirements of its credit rating agency are met.

148. The insurer uses stochastic models to calculate the level of capital required to absorb 'significant risk events' that take place once every 200 years. The model is called an Individual Capital assessment (ICA). The FSA examine and approve the model and the insurer is required to endeavour to maintain capital in excess of the amount calculated by the model. If the insurer fails to maintain the required amount, the FSA will intervene in the business of the insurer and seek to agree a plan for it to restore capital levels within a reasonable time frame. However, it is likely insurers will at times hold capital at levels where this intervention will not happen.

Solvency II

149. Solvency I is due to be replaced by a new pan-European regime called Solvency II. There are some similarities between the current SCR and the Solvency II requirement. However, Solvency II is expected to have an impact on the levels of capital most insurers will be required to hold. In anticipation of its introduction and potential impact some of the insurers, to which it will apply, are holding increased levels of capital than they would normally hold were it not a factor to be considered.

Rating Agency Ratings

150. Insurance companies seek credit rating agency ratings for a number or reasons. For example, a rating may enable the insurer to enter a particular insurance market, to be able to write specific types of insurance business or underwrite the risks of particular customers. For reference, the capital required for an insurer to meet its SCR is broadly equivalent to a Standard and Poors rating of BBB. However, for the reasons noted above an insurer may be required to seek a higher credit rating to enable it to write specific types of insurance business. Such factors need to be taken into account when considering the capitalisation position of a company which holds more capital than that normally required by its local regulator.

151. An insurance group and the principal companies within an insurance group are likely to have a rating from one or more of the major credit rating agencies. The rating agencies take into account similar factors to those taken into account by the FSA in its consideration of an insurer's SCR; each will seek to analyse the risks the company is exposed to and assess its levels of capital in relation to its own assessment of those risks.

152. In addition to the above some insurers will be seeking a higher credit rating than they currently have. Since improvements in credit ratings can take time, it is likely that higher levels of capital are required to be held for some time before the uplift in credit rating is achieved.

153. The work underpinning the provision of a rating by an agency is detailed and takes into account a significant number of factors. Whilst the factors may differ depending on the specific agency and rating sought, they are likely to include an assessment of:

- the company or group risk management procedures e.g. how it monitors and adjusts for mistakes, frequency of its risk monitoring;
- quality and stability of reinsurance vehicles used;
- size and impact of relevant risk categories on the insurer e.g. credit risk, investment risks, and interest rate risk.

Other commercial factors underpinning capitalisation levels

154. Insurers generally generate profits in one of two ways: firstly, through their underwriting activities, and secondly, by way of the investment of the premiums collected from that activity. The profit split between these will depend on the insurer and its type of insurance line(s). It can also be influenced by investment returns and the general health of the economy the insurer operates within.

i) The need for a capital buffer

155. As noted above, whether the insurer uses a capital benchmark by reference to either its SCR or the level set by a rating agency, it would be very unusual for it to not also include a capital buffer. This buffer acts as a safety net to ensure reasonable fluctuations in capital levels do not result in a breach of the capital benchmarks for example SCR or Credit Rating. Capital buffers are generally calculated on a risk, rather than a quantum/percentage of MCR/SCR basis. This is in order to minimise the risk of approaching the regulatory floors and attracting a regulator's attention.

156. It is likely insurers will always include a capital buffer, so its presence should not be taken as an automatic indication of overcapitalisation. The aim should be to firstly establish whether it is reasonable to suppose that an uncontrolled company would hold a buffer and secondly what the level of that buffer would be.

157. The above requires an analysis of the facts of the case, which will take into account both the size of the buffer and the length of time it is held at a particular level. Factors include, but are not limited to:

- the explanations given by the company as to how the buffer is calculated and what factors are taken into account in determining its size;
- whether the buffer held is in line with wider group capital management policy i.e. whether it is higher in the CFC than within other companies within the wider group;
- the capitalisation of other insurers within the same territory and market place;
- volatility in the market i.e. when assets and liabilities are recorded at fair value volatility in the market place can have a material impact on the levels of capital held.
- local regulatory concerns i.e. is the company retaining capital in preparation for changes in the local regulatory regime;
- business planning. Are they retaining capital for business growth i.e. expanding its underwriting levels or looking to make acquisitions.

ii) Territory-specific issues

158. Factors specific to the particular territory within which a CFC operates may be beyond its control and also influence the level of capital it is required to hold. Factors could include:

- regulatory requirements - certain regimes may require high levels of capital for particular types of insurance business or they may require capital to be held locally in order to minimise any risk of default in their territory;

- exchange controls – some regimes may prohibit the repatriation of certain profits.

iii) Group's capital levels

159. It is unlikely for an insurance group to hold excess capital for long periods without paying it out to its shareholders, using it within the business for its trading activities, or ring fencing it for a particular purpose. This will primarily be driven by the group aiming to achieve its required return on capital employed (ROCE) from the capital it holds. What constitutes a long period will differ and will depend on the facts of each case. You will need to take into account a range of factors in establishing the purposes for which it is being held and also the extent of control the CFC and group have over its movement and use.

160. For example, a CFC may have retained capital as a 'war chest' for an acquisition of another company Where such capital is held to facilitate that acquisition for only a short period, HMRC are not likely to argue it is either excess free capital or excess free assets. However, if this war chest is built up over a number of years it is arguably excess and chargeable within Chapter 6 (as it is supporting shareholder activity and not the CFCs own insurance business).

161. There will undoubtedly be a variety of reasons as to why high levels of capital are held. The focus should be on firstly identifying whether the levels of capital resources includes excess free capital and/or excess free assets and secondly (to the extent there are also UK connected capital contributions) the factors supporting that excess.

162. One useful indicator to the CFC's capitalisation could be to compare it to the SCR and/or rating agency levels within the wider group. This information may be disclosed within the group accounts, or alternatively by the group setting out the group's capitalisation position.

iv) Capital ring fenced for the payment of dividends

163. An insurance company may hold capital in excess of what its insurance activities require in preparation for paying the excess to its parent company via a dividend. Where capital is ring fenced for this purpose and it is due to be paid within 12 months of its having arisen, it is unlikely for that capital to be considered excessive and thereby within the charge of Chapter 6.

164. In determining the above, it will be necessary to consider when the profits arose and whether the internal corporate documentation indicates that a dividend has been, or is shortly to be, declared. The group may point towards factors outside its control that influence the length of time profits are held, which mean the reference point of 12 months is inappropriate. In these circumstances it will be necessary to assess the relevance of the points the insurer may raise, which may include:

- local regulatory restrictions. Some territories may require all distributions to be agreed at an annual general meeting. If one has just passed they may have no option but to wait for the next one,

- delays in the provision of external advice to which the dividend relates,

- unexpected market volatility which requires capital to be retained for a longer period to protect against the breach of capital benchmarks.

v) Capital held to support the underwriting of new insurance business.

165. Insurance companies will at times retain capital in preparation for a drive to write new insurance business. This may involve moving into a new insurance line, or taking advantage of a part of a business cycle where market place premiums are expected to be high. Where capital is said to be held for this purpose, it will be necessary to review factors such as whether the internal and external communications supports this i.e. has the marketing for such an increase in business commenced?

vi) Use of insurance 'sidecar' structures

166. Insurance sidecars increased in prominence after the significant events of September 11th 2001 in New York and the 2005 hurricane season. Sidecars are generally set up as special purpose vehicles (SPV's) which enable participating investors (e.g. hedge funds and private equity due to the high level of capital they have at their disposal) access to insurance underwriting participation. The SPV insurance investment company offers them access to potentially high level returns on capital (RoC). They are attractive, as the investor is not exposed to the wider legacy risk of the principal insurer.

167. The investors assume the risk and potential return of a small and limited category of insurance policies through the sidecar. The arrangement will generally last for between one and three years, thereby limiting the investor's exposure. The arrangement benefits the (re)insurer as it is able to write higher levels of business at particular risk periods, without having to increase the level of capital it holds or negatively impacting on its credit rating.

168. The CFCs level of capital should not increase where it fully transfers the risk exposure from this additional business to the sidecar. As the sidecars are usually fully collateralised, the CFCs risk exposure should be negligible and it should not be required to hold higher levels of capital than it otherwise would. However, it is possible to encounter certain structures where the increased

business underwritten by the CFC is not all fully within the sidecar, thereby increasing the amount of capital the CFC is required to hold.

Relevance of the group's capital management policy

169. A consideration of the group's capital management policy may make it unnecessary to carry out a detailed review of the factors set out above for each separate CFC. A suitable policy will ensure that CFCs are not over-capitalised and so it is reasonable to consider advance agreements with a group concerning the way that the capitalisation of their subsidiaries is managed. If a policy is reasonable, it should be possible to accept that the CFCs are not over-capitalised provided that the policy is adhered to.

170. Before reaching such agreement, it will be necessary to review the capital management policy of the group and how it is applied to the CFC(s) in question. Any agreement will need to be based upon the group's statement of these policies. The ultimate aim of the review is to ensure that the group's policy does not permit the retention of excess capital within a low tax jurisdiction. The review must ensure the policy is sufficiently robust and contains a suitable monitoring process so the CRM can ensure it is being adhered to.

171. An agreement may remain in place for a number of years provided there are no major changes to the group's policy or its business. It should be reviewed periodically – for example, every 3 years - to ensure it is giving fair results.

172. Many insurance groups will choose to have their capital centrally held within the ultimate parent of the insurance group or a regional holding company of a sub-group. The group's capital management policy should include details on when the capital held is in excess of that required to support the risk exposure of the company, how long that excess should be held for and what should be done with it.

173. For example, some groups will look to have their capital centrally held by their parent company. Others may have a cash-rich parent company and therefore choose to leave excess capital where it arises. The latter scenario increases the likelihood that profits will be caught by Chapter 6, but this will depend on what the local companies do with the excess capital and the extent to which UK connected capital contributions arise within it.

Example

174. Group A has a capital management policy that includes a requirement for all insurance companies to include an appropriate capital buffer above that required to achieve both its chosen agency's credit rating and also its internal assessment of market volatility. One of its insurance CFCs (Company B) has an SCR of £200m, an 'AA' Agency Rating capital requirement of £300m and a capital buffer (which includes its market volatility assessment) of £74m. To be in line with group policy Company B must ensure it holds capital of at least £374m.

175. The capital held by Company B fluctuates between £365m and £420m during its accounting period. At the year end the capital held is £410m. Our review shows that the capital levels held during the year have not been manipulated for avoidance purposes, so it is reasonable to base our assessment under Chapter 6 on the year end balance.

176. Where this £36m excess (£410m - £374m) is paid out as a dividend within the next 12 months it is unlikely to be caught within Chapter 6. However, to the extent Company B retains the whole, or part, of the £36m (and its UK connected capital contributions are shown to at least equal this amount) it will need to be able to show the balance is being retained for its insurance business

177. In addition to assessing the reasons supporting the retention of the £36m, comfort must also be gained on the extent to which the £74m capital buffer is comparable to the hypothetical position of company B not being a 51% subsidiary.